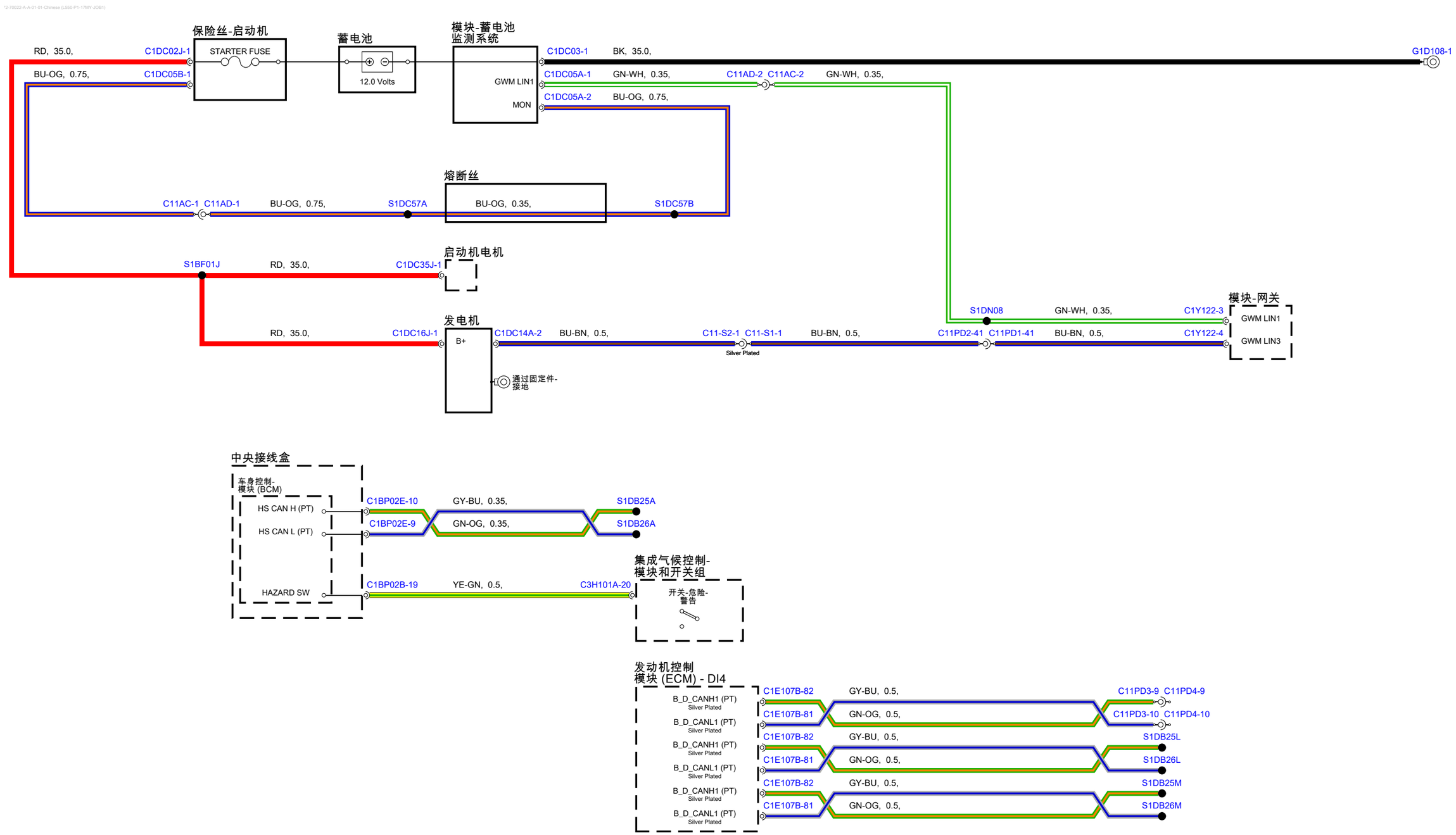414-02 - 发电机和调节器 --- JLR 23 44 43_1E - DISCOVERY SPORT iEWD (1a) 633943 > --- (1 / 1)